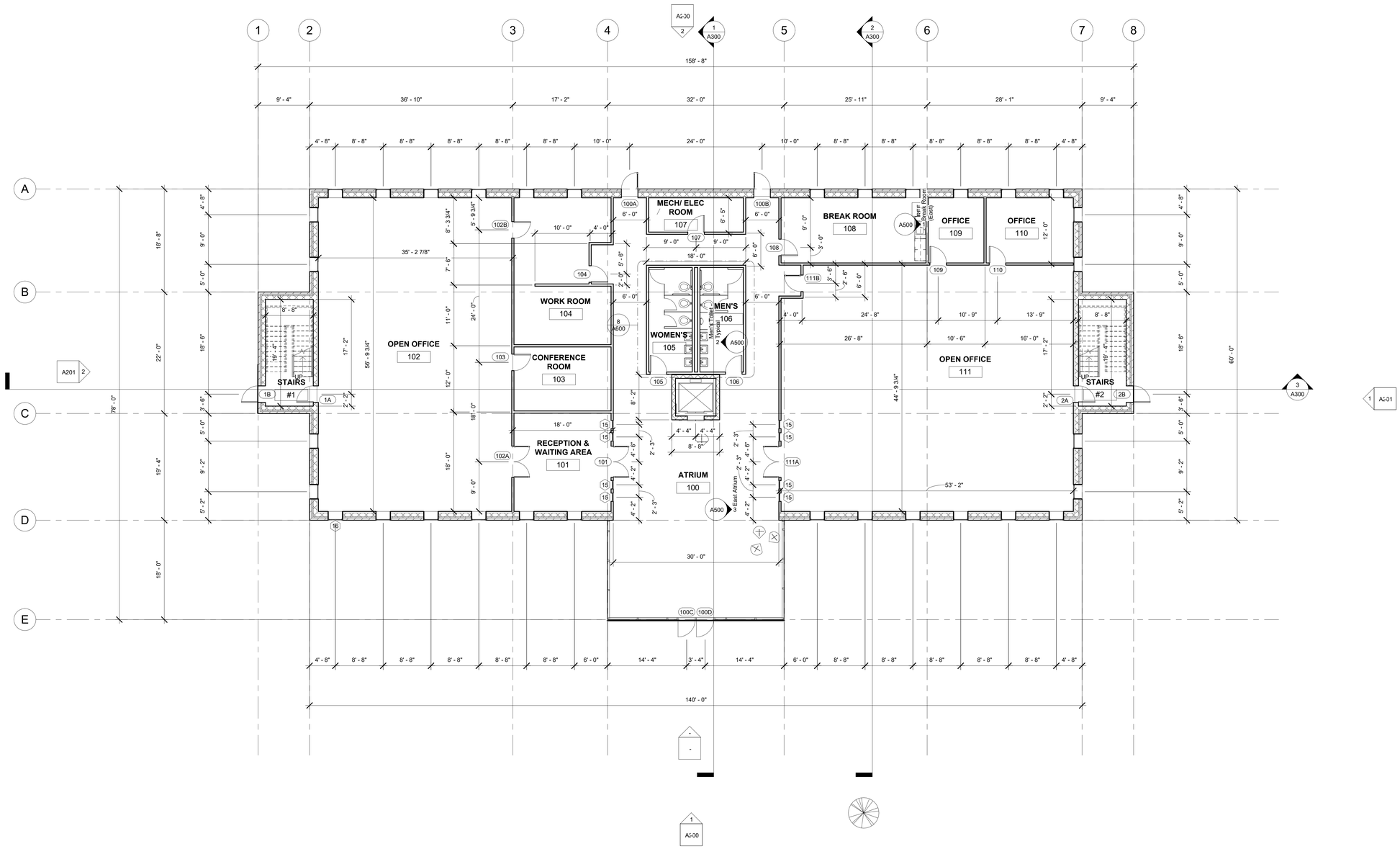

1 Level 1
1/8" = 1'-0"

Nicholas Rodriguez
Drafting and Design

Digital Design Graphics Technology
2277 Napa-Vallejo Hwy
Napa, CA 94558

No.	Description	Date

RODRIGUEZ

HARBOR VIEW OFFICES

LEVEL 1 FLOOR PLAN

Project Number	2024-0043
Date	4-30-2024
Drawn By	NRODRIGUEZ
Checked By	CJOURGENSEN

A101

Scale	1/8" = 1'-0"

6/11/2024 11:53:50 AM

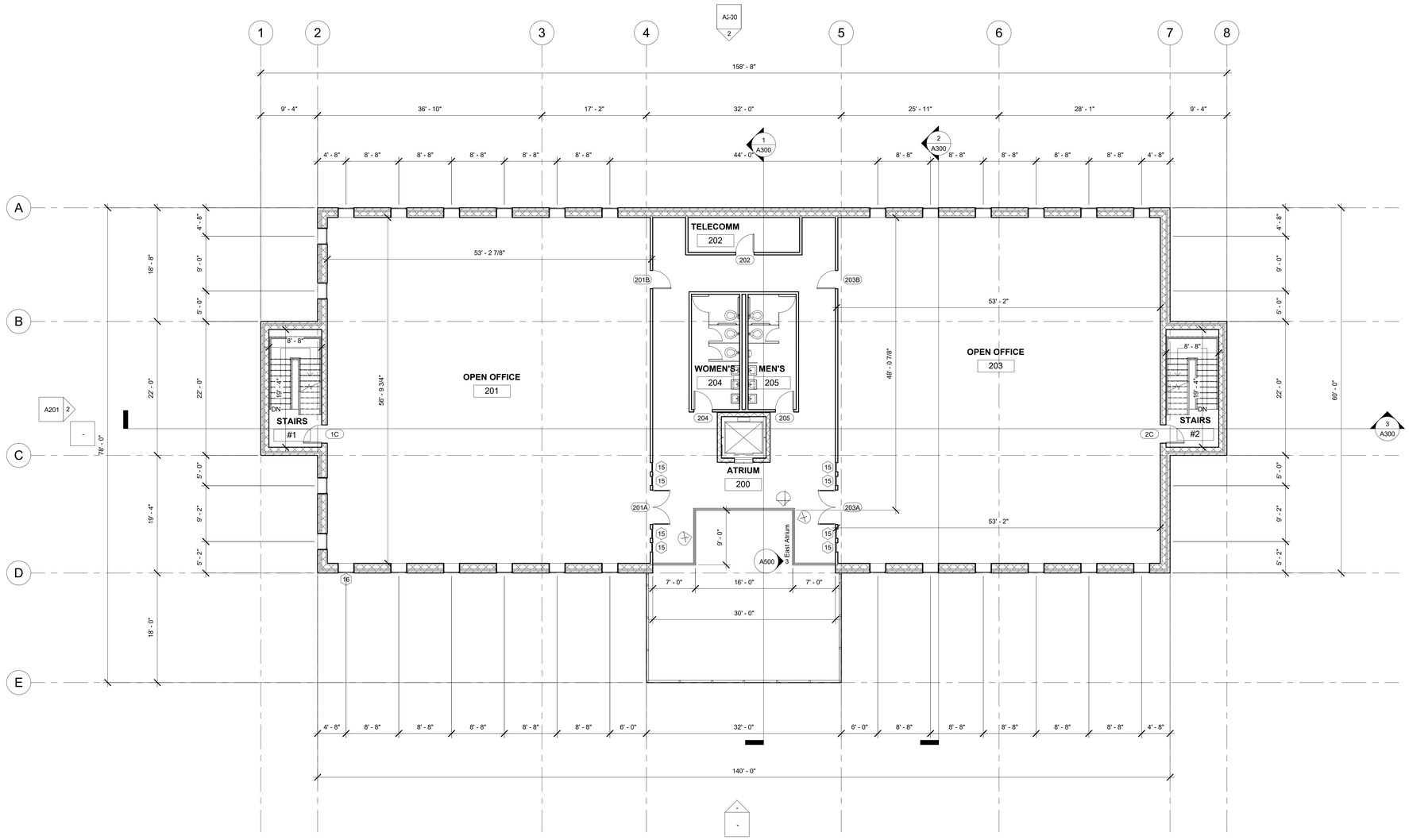

1 Level 2
1/8" = 1'-0"

NICHOLAS RODRIGUEZ
DRAFTING AND DESIGN

Digital Design Graphics Technology
2277 Napa-Vallejo Hwy
Napa, CA 94558

No.	Description	Date

RODRIGUEZ

HARBOR VIEW OFFICES

LEVEL 2 FLOOR PLAN

Project Number	2024-0043
Date	4-30-2024
Drawn By	NRODRIGUEZ
Checked By	CJOURGENSEN

A102

Scale 1/8" = 1'-0"

6/11/2024 11:53:51 AM

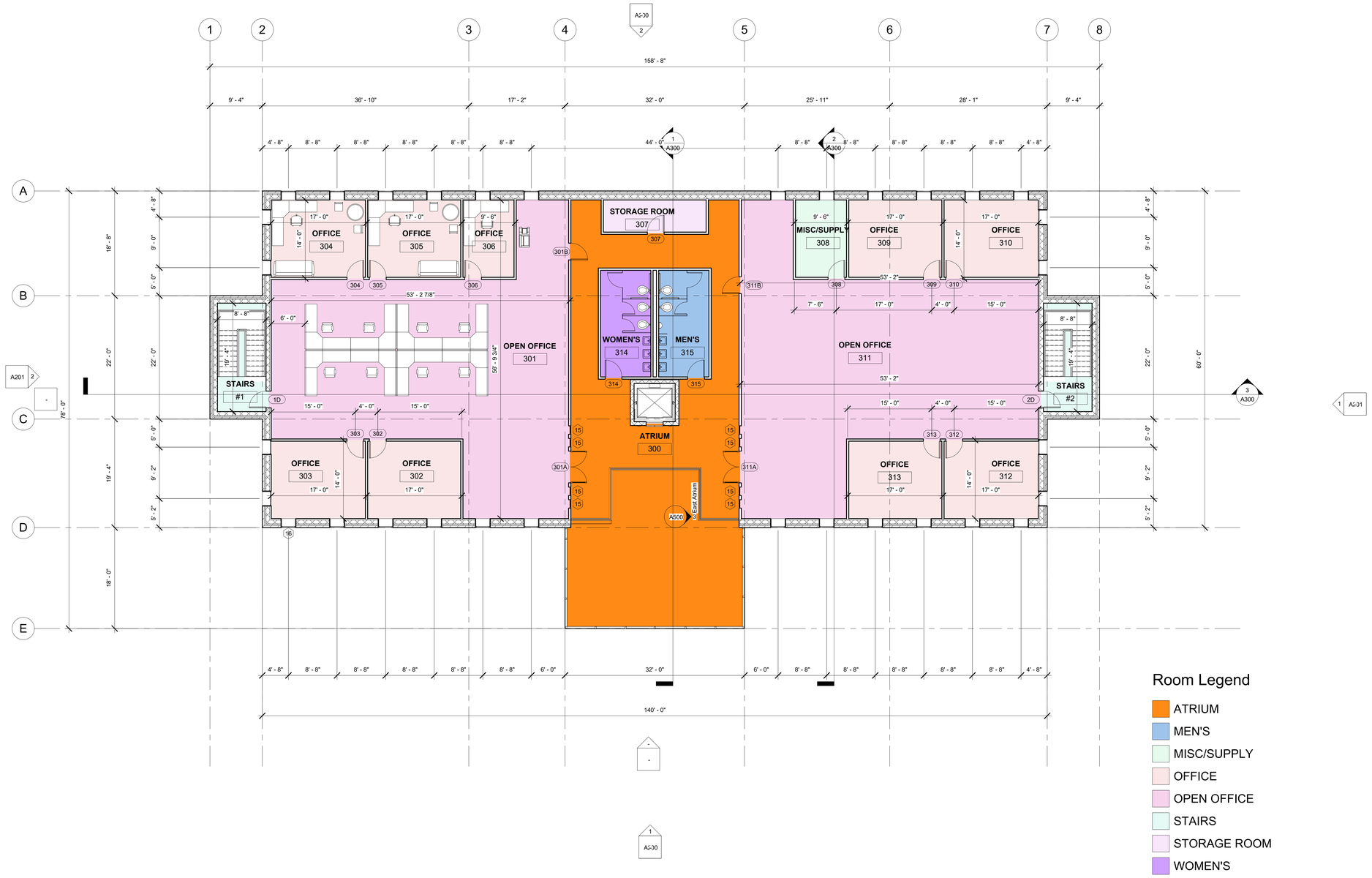

1 Level 3
1/8" = 1'-0"

NICHOLAS RODRIGUEZ
DRAFTING AND DESIGN

Digital Design Graphics Technology
2277 Napa-Vallejo Hwy
Napa, CA 94558

No.	Description	Date

RODRIGUEZ

HARBOR VIEW OFFICES

LEVEL 3 FLOOR PLAN

Project Number	2024-0043
Date	4-30-2024
Drawn By	NRODRIGUEZ
Checked By	CJOURGENSEN

A103

Scale	1/8" = 1'-0"

6/11/2024 11:53:52 AM

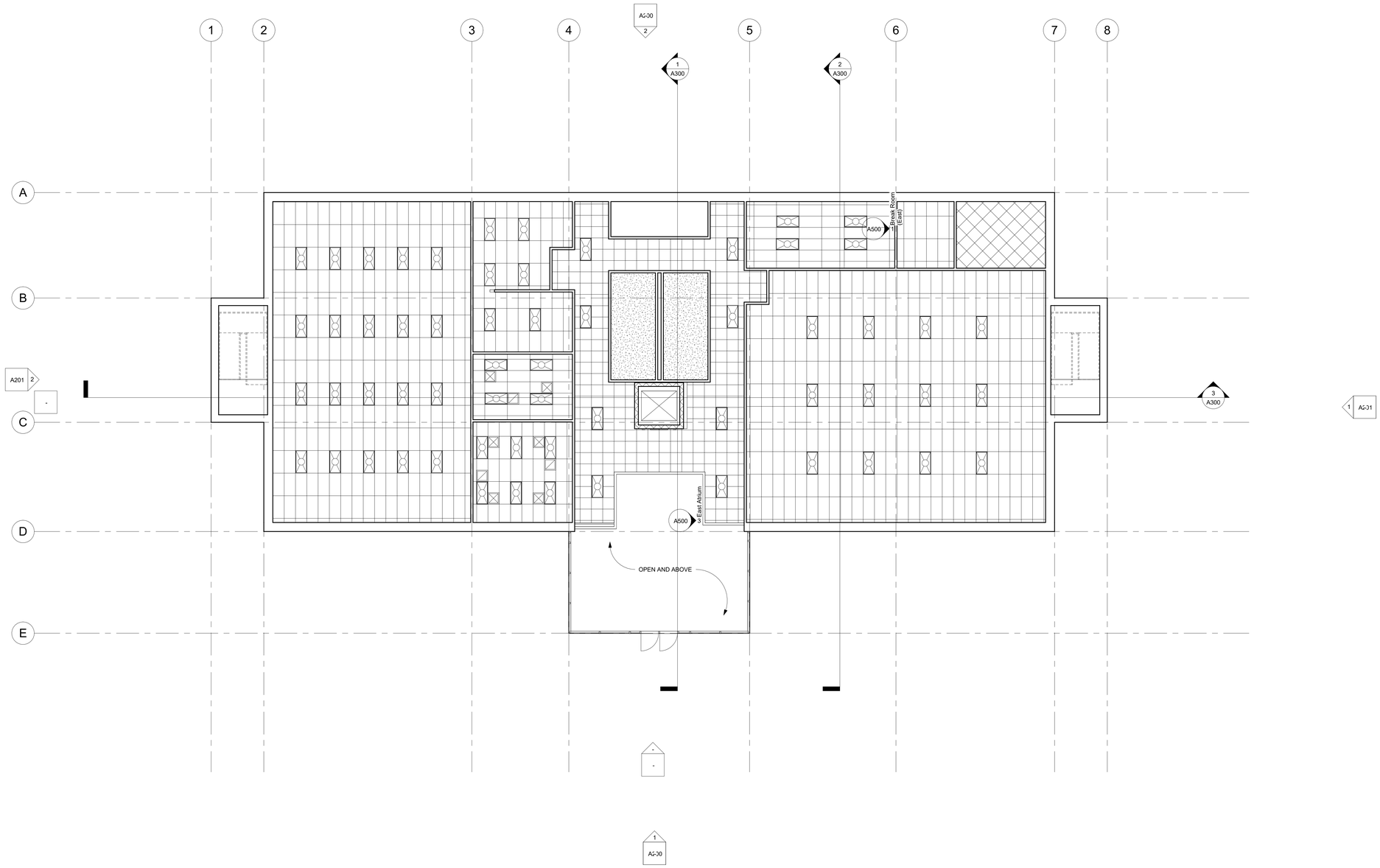

1 Level 1
1/8" = 1'-0"

NICHOLAS RODRIGUEZ
DRAFTING AND DESIGN

Digital Design Graphics Technology
2277 Napa-Vallejo Hwy
Napa, CA 94558

No.	Description	Date

RODRIGUEZ

HARBOR VIEW OFFICES

LEVEL 1 RCP

Project Number	2024-0043
Date	4-30-2024
Drawn By	NRODRIGUEZ
Checked By	CJOURGENSEN

A111

Scale 1/8" = 1'-0"

6/11/2024 11:53:53 AM

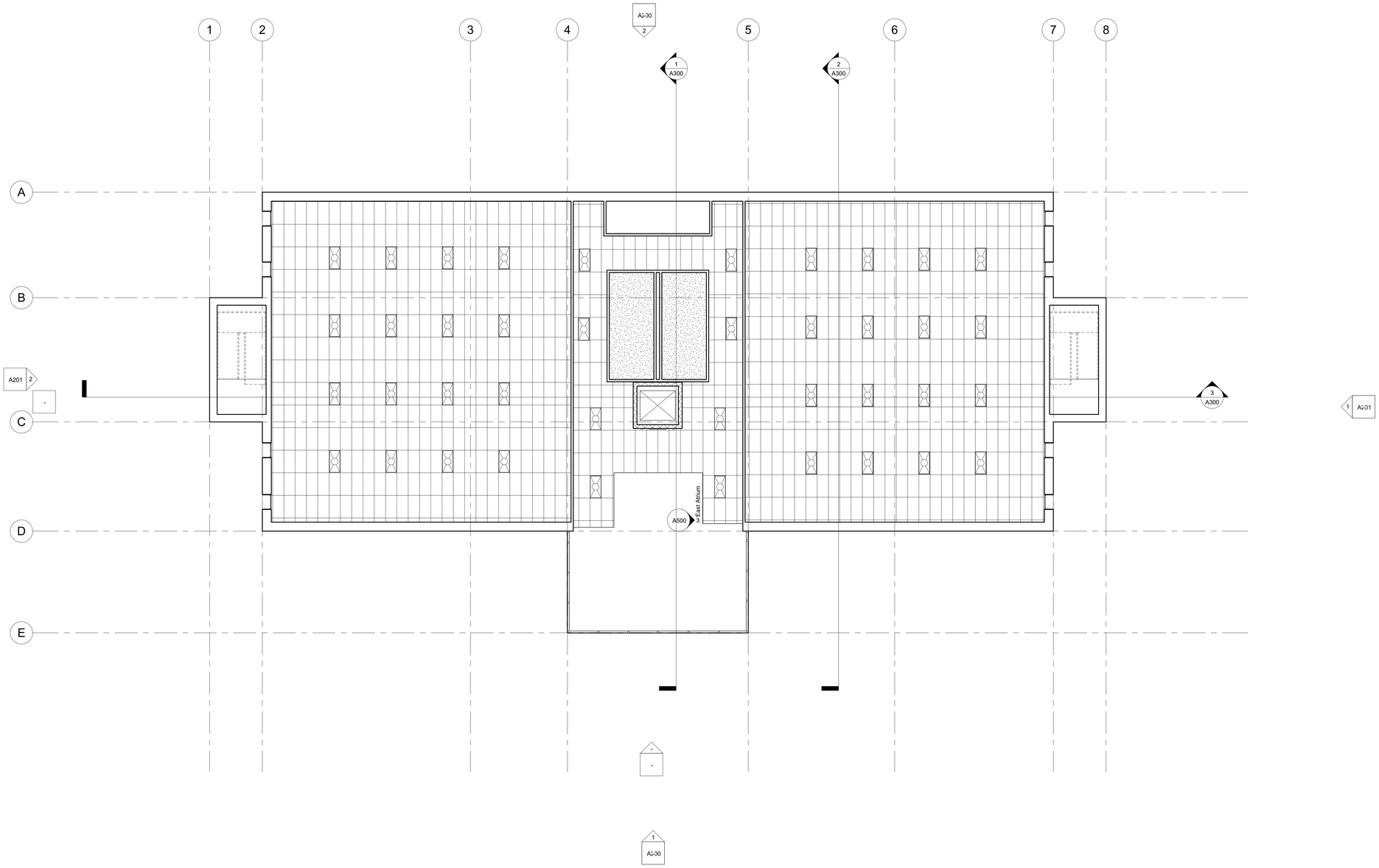

1 Level 2
1/8" = 1'-0"

NICHOLAS RODRIGUEZ
DRAFTING AND DESIGN

Digital Design Graphics Technology
2277 Napa-Vallejo Hwy
Napa, CA 94558

No.	Description	Date

RODRIGUEZ

HARBOR VIEW OFFICES

LEVEL 2 RCP

Project Number	2024-0043
Date	4-30-2024
Drawn By	NRODRIGUEZ
Checked By	CJOURGENSEN

A112

Scale	1/8" = 1'-0"

6/11/2024 11:53:53 AM

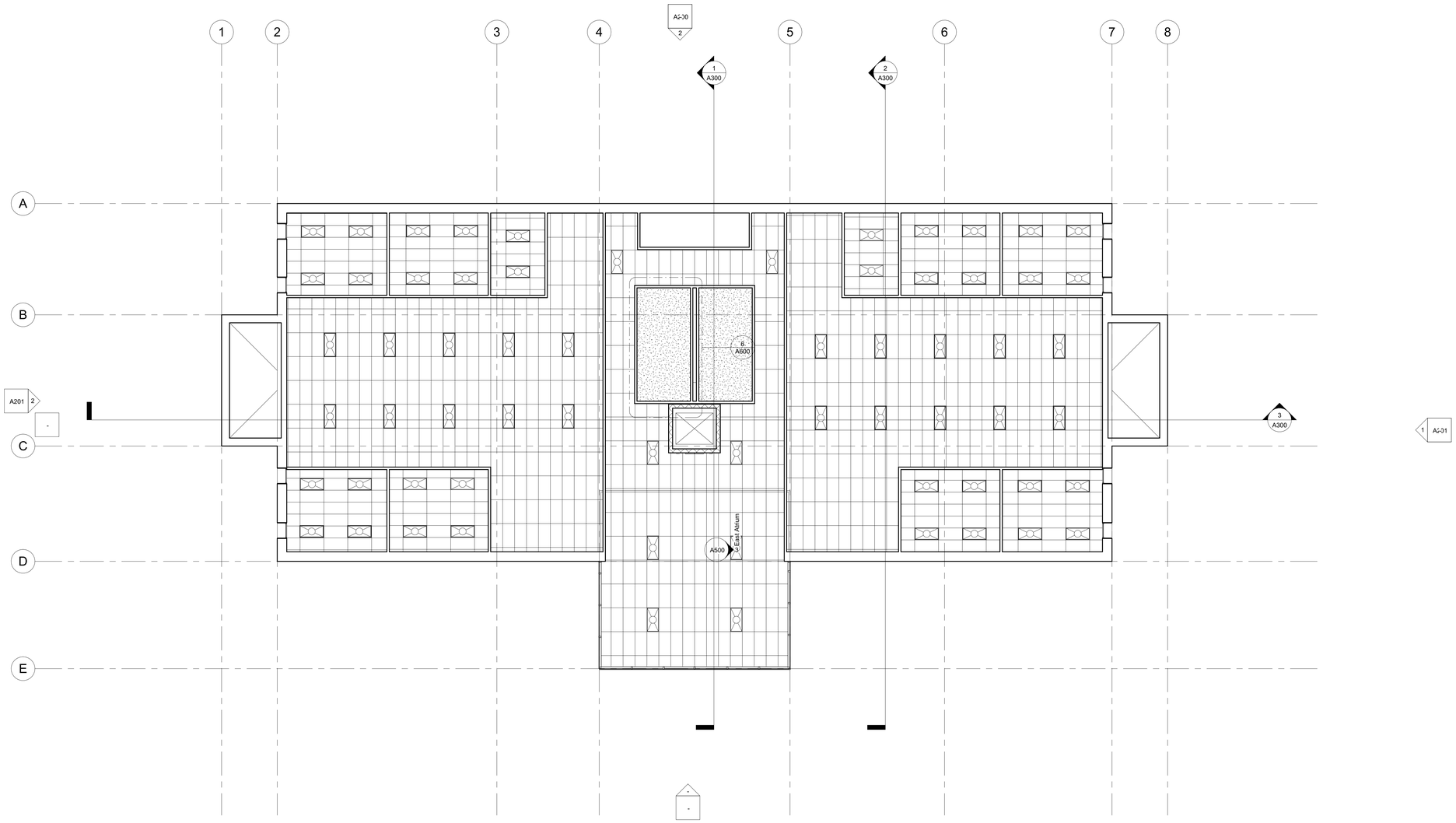

1 Level 3
1/8" = 1'-0"

NICHOLAS RODRIGUEZ
DRAFTING AND DESIGN

Digital Design Graphics Technology
2277 Napa-Vallejo Hwy
Napa, CA 94558

No.	Description	Date

RODRIGUEZ

HARBOR VIEW OFFICES

LEVEL 3 RCP

Project Number	2024-0043
Date	4-30-2024
Drawn By	NRODRIGUEZ
Checked By	CJOURGENSEN

A113

Scale	1/8" = 1'-0"

6/11/2024 11:53:53 AM

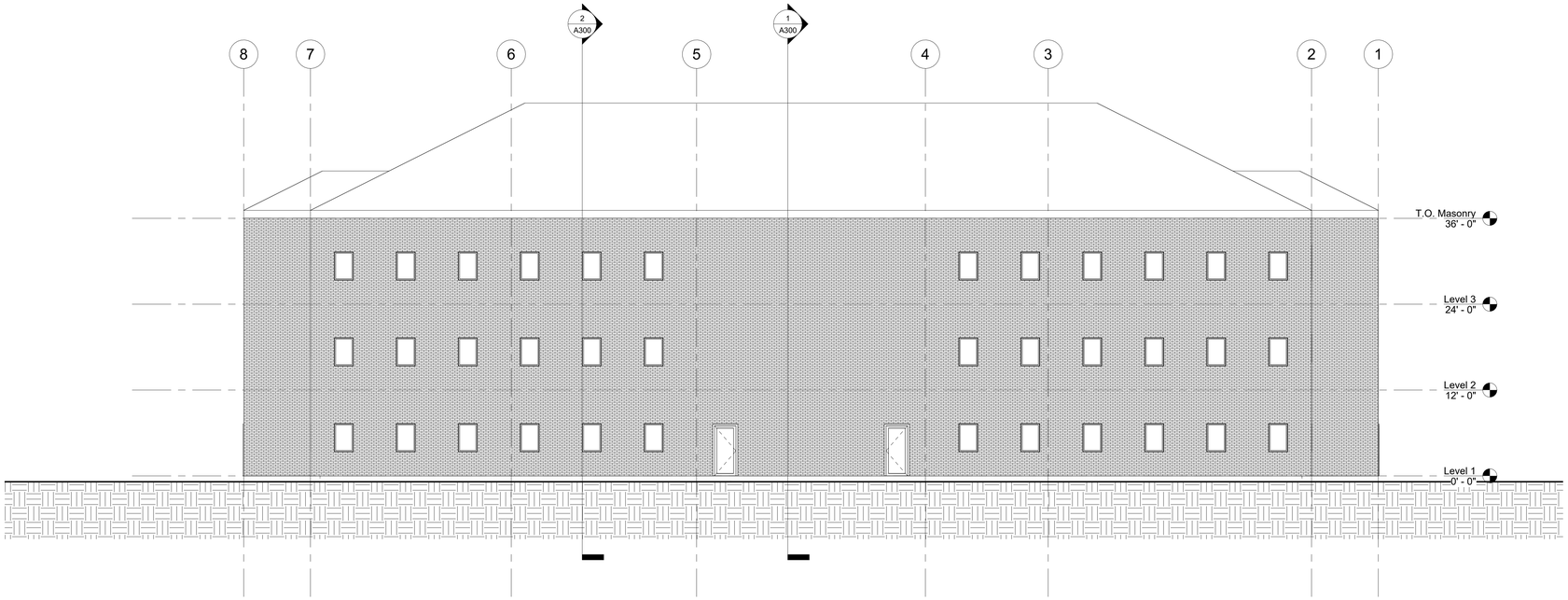

2 North
1/8" = 1'-0"

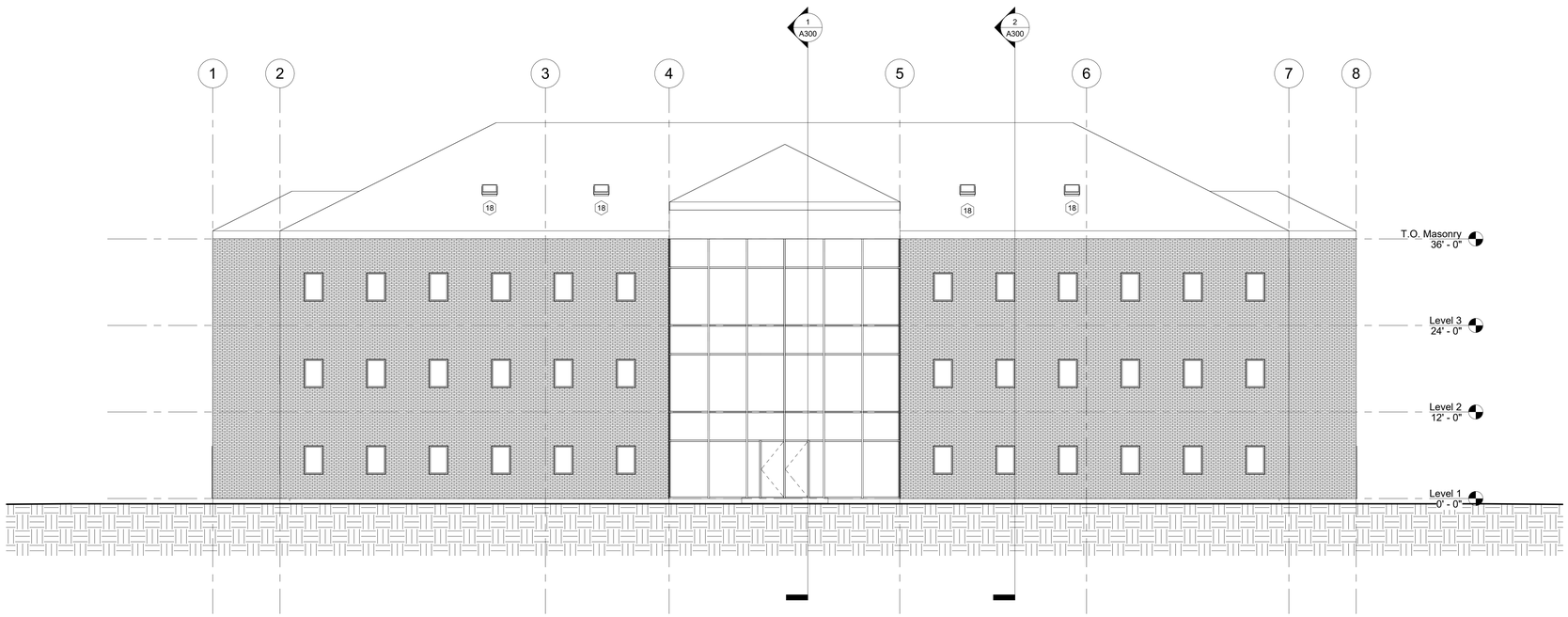

1 South
1/8" = 1'-0"

NICHOLAS RODRIGUEZ
DRAFTING AND DESIGN

Digital Design Graphics Technology
2277 Napa-Vallejo Hwy
Napa, CA 94558

No.	Description	Date

RODRIGUEZ

HARBOR VIEW OFFICES

EXTERIOR ELEVATIONS

Project Number	2024-0043
Date	4-30-2024
Drawn By	NRODRIGUEZ
Checked By	CJOURGENSEN

A200

Scale	1/8" = 1'-0"

6/11/2024 11:53:55 AM

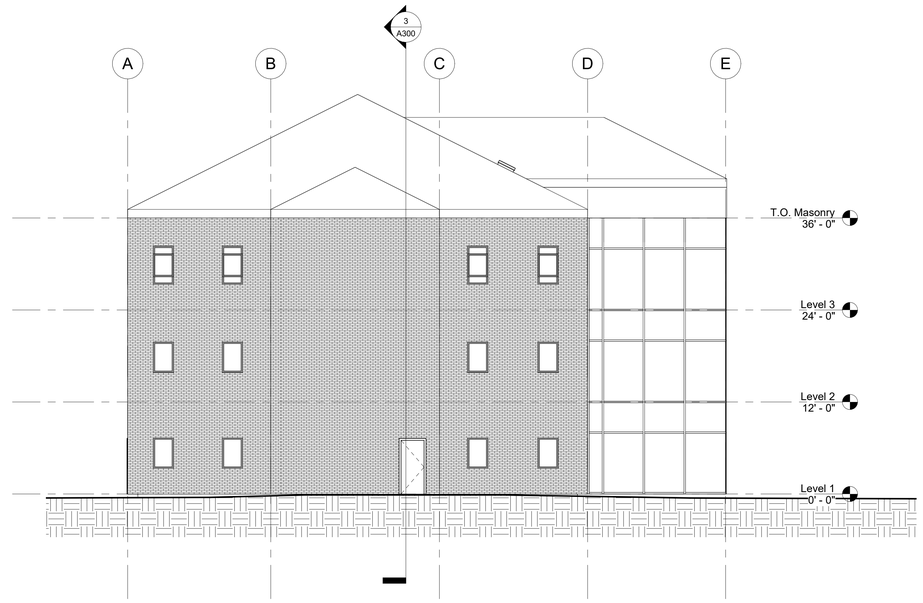

2 West
1/8" = 1'-0"

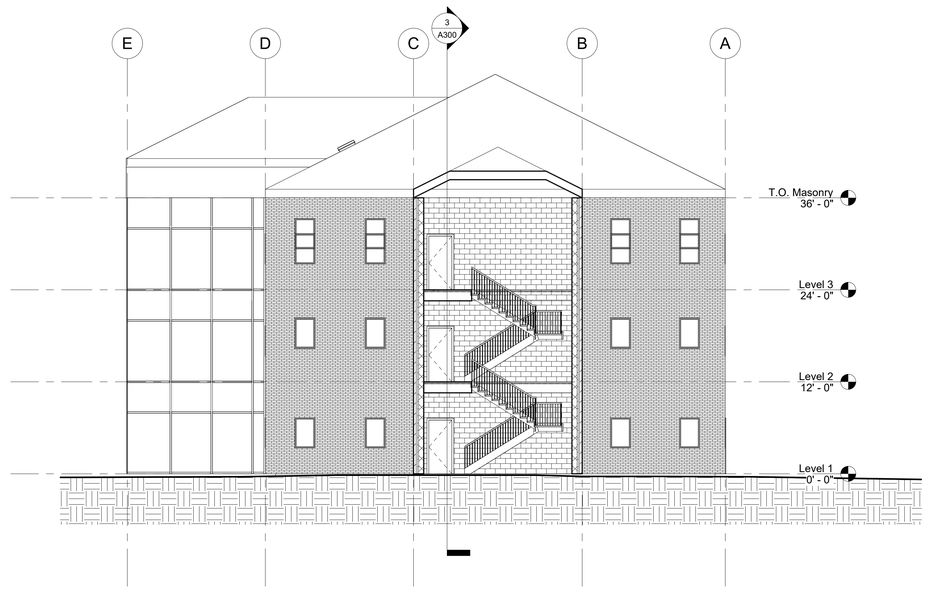

1 East
1/8" = 1'-0"

NICHOLAS RODRIGUEZ
DRAFTING AND DESIGN

Digital Design Graphics Technology
2277 Napa-Vallejo Hwy
Napa, CA 94558

No.	Description	Date

RODRIGUEZ

HARBOR VIEW OFFICES

EXTERIOR ELEVATIONS

Project Number	2024-0043
Date	4-30-2024
Drawn By	NRODRIGUEZ
Checked By	CJOURGENSEN

A201

Scale	1/8" = 1'-0"

6/11/2024 11:53:57 AM

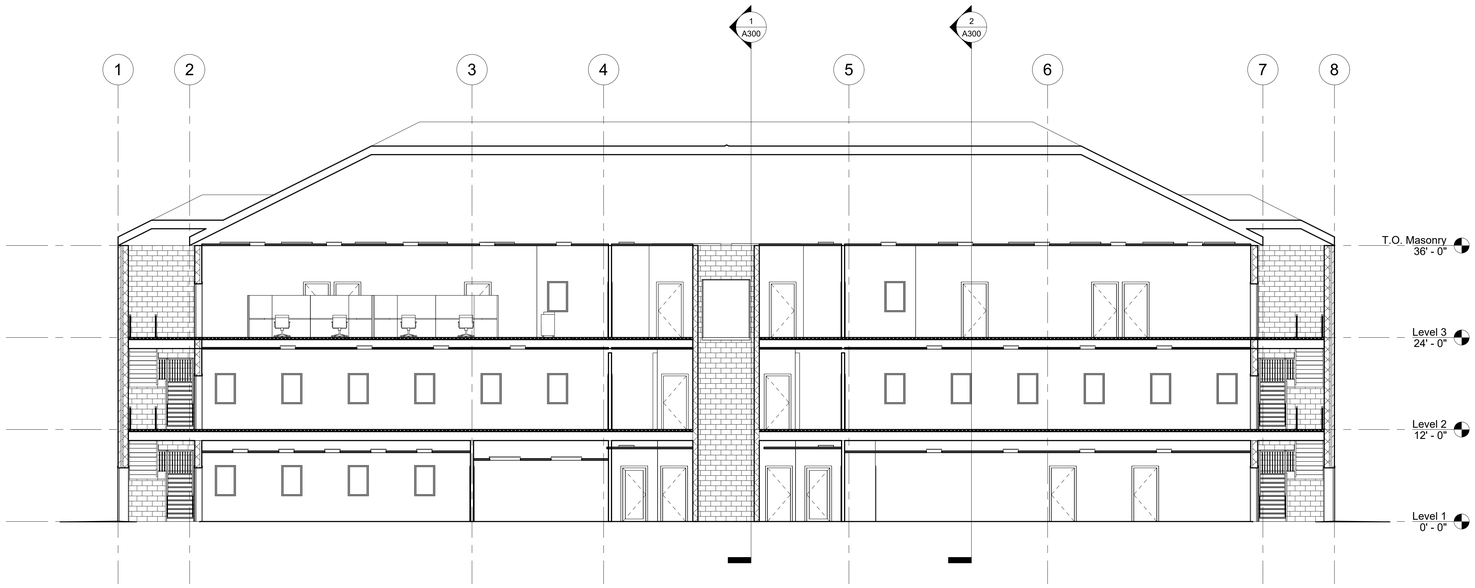

3 Longitudinal Section
1/8" = 1'-0"

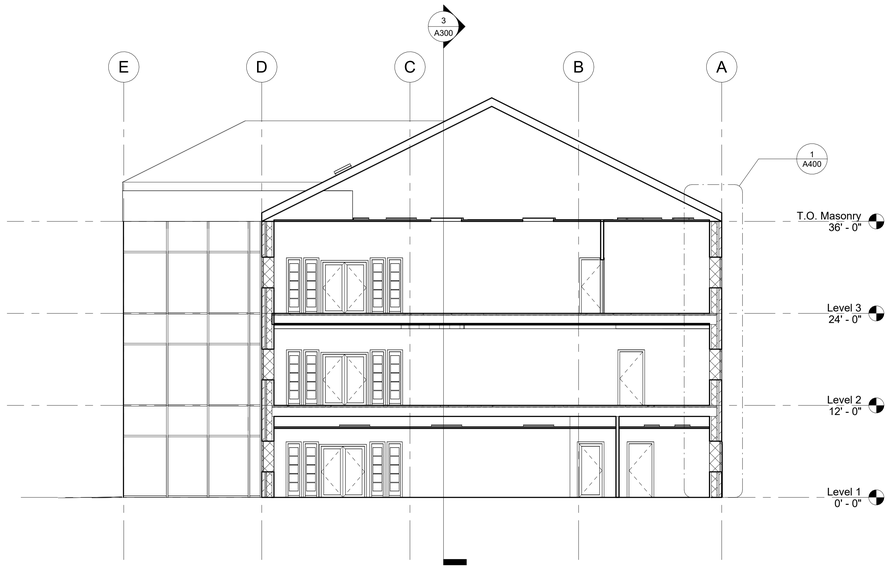

2 Cross Section 1
1/8" = 1'-0"

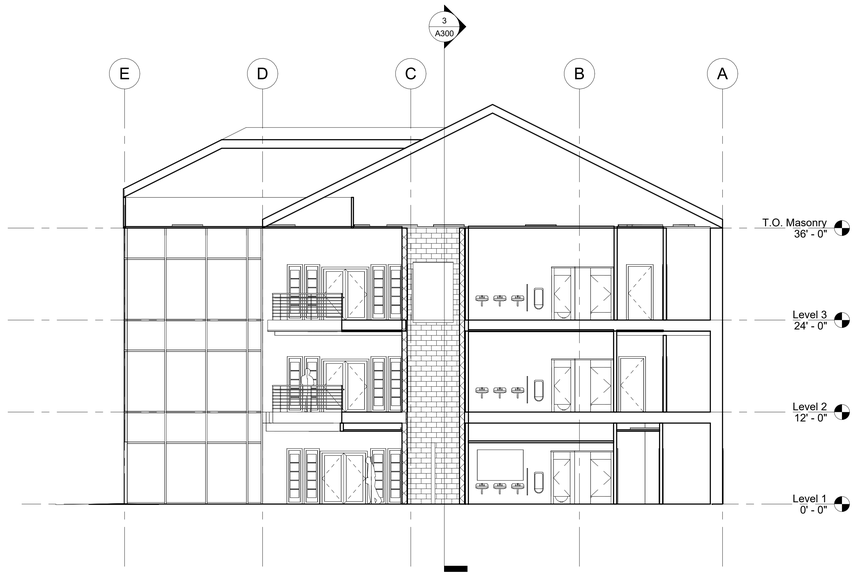

1 Atrium Section
1/8" = 1'-0"

NICHOLAS RODRIGUEZ
DRAFTING AND DESIGN

Digital Design Graphics Technology
2277 Napa-Vallejo Hwy
Napa, CA 94558

No.	Description	Date

RODRIGUEZ

HARBOR VIEW OFFICES

BUILDING SECTIONS

Project Number	2024-0043
Date	4-30-2024
Drawn By	NRODRIGUEZ
Checked By	CJOURGENSEN

A300

Scale	1/8" = 1'-0"

6/11/2024 11:54:00 AM

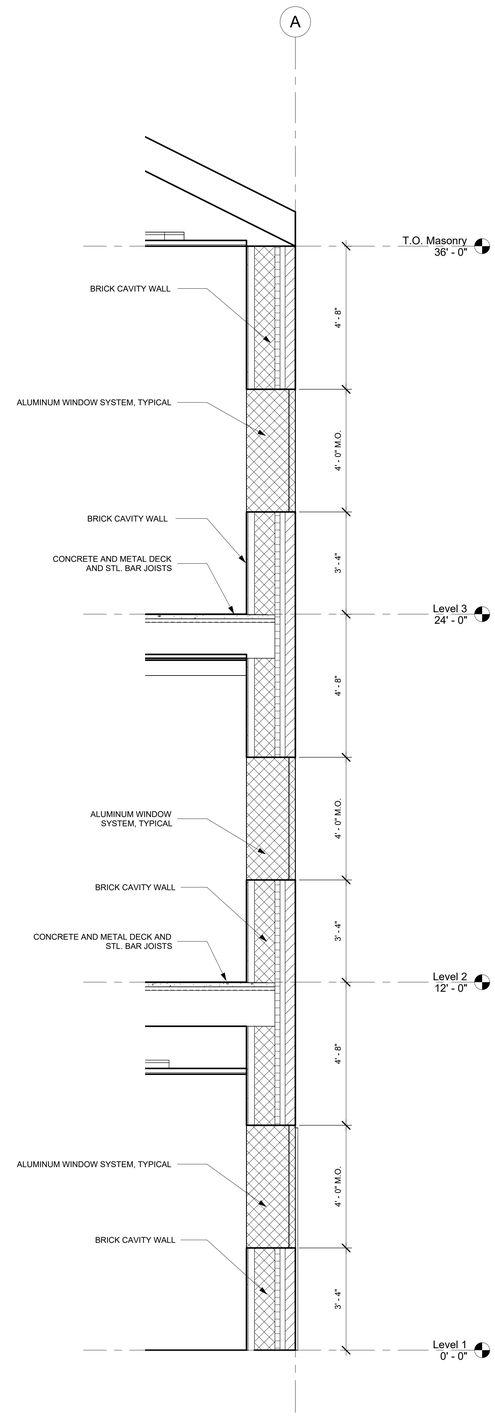

1 Cross Section 1 - Callout 1
1/2" = 1'-0"

NICHOLAS RODRIGUEZ
DRAFTING AND DESIGN

Digital Design Graphics Technology
2277 Napa-Vallejo Hwy
Napa, CA 94558

No.	Description	Date

RODRIGUEZ

HARBOR VIEW OFFICES

WALL SECTIONS

Project Number	2024-0043
Date	4-30-2024
Drawn By	NRODRIGUEZ
Checked By	CJOURGENSEN

A400

Scale	1/2" = 1'-0"

6/11/2024 11:54:00 AM

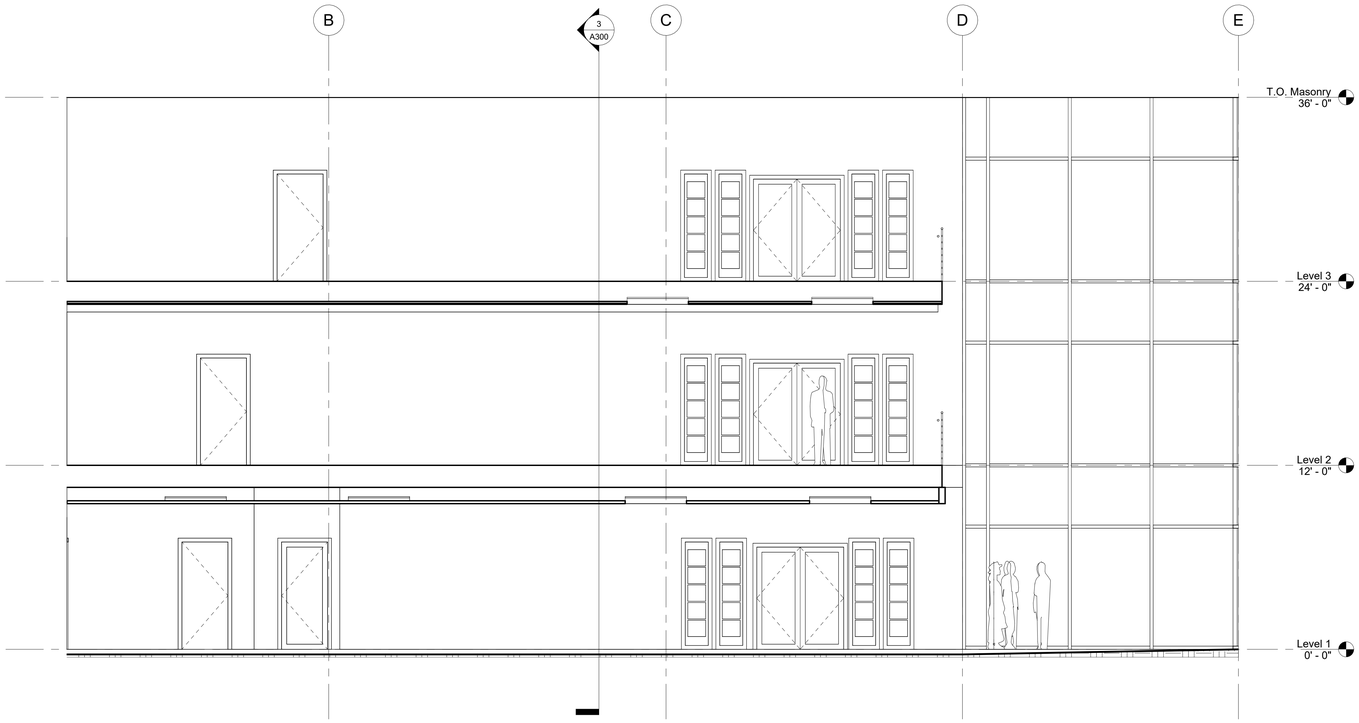

3 East Atrium
1/4" = 1'-0"

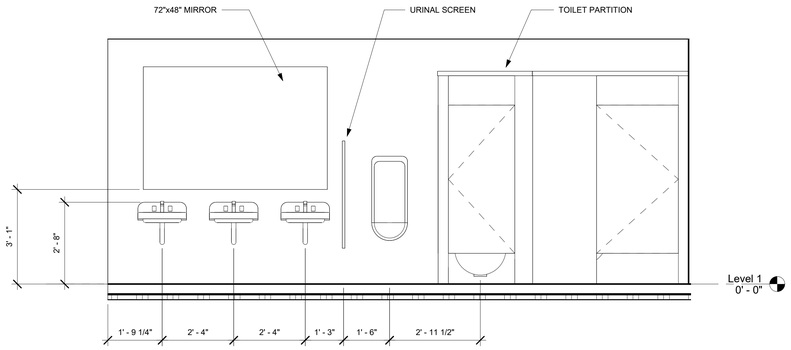

2 Men's Toilet - Typical
1/2" = 1'-0"

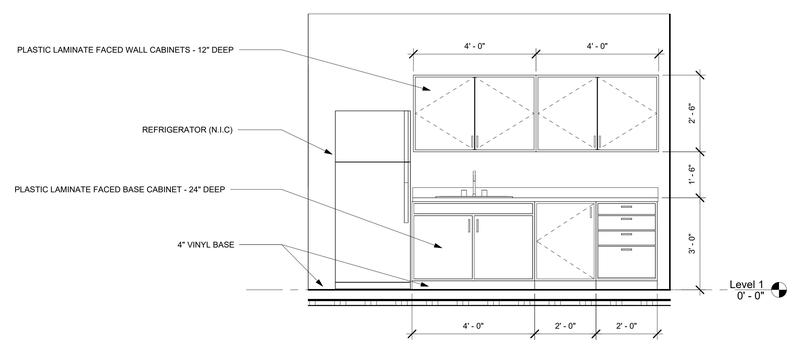

1 Break Room (East)
1/2" = 1'-0"

NICHOLAS RODRIGUEZ
DRAFTING AND DESIGN

Digital Design Graphics Technology
2277 Napa-Vallejo Hwy
Napa, CA 94558

No.	Description	Date

RODRIGUEZ

HARBOR VIEW OFFICES

INTERIOR ELEVATIONS

Project Number	2024-0043
Date	4-30-2024
Drawn By	NRODRIGUEZ
Checked By	CJOURGENSEN

A500

Scale	As indicated

6/11/2024 11:54:00 AM

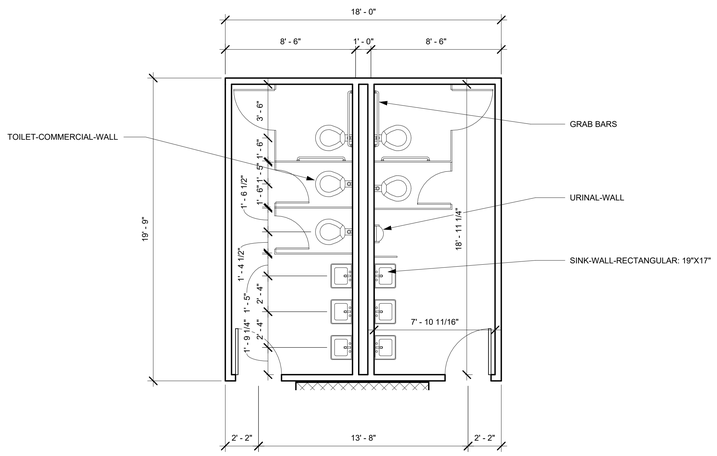

8 Toilet Room Detail
1/4" = 1'-0"

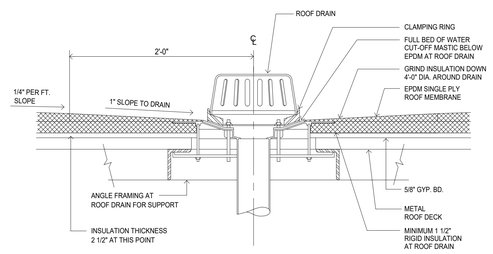

7 Typical Roof Drain Detail
1 1/2" = 1'-0"

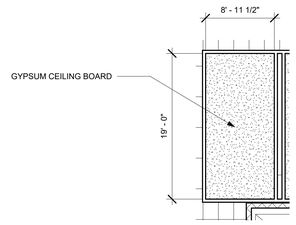

6 Toilet Room Ceiling Detail
1/8" = 1'-0"

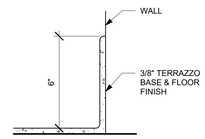

5 Terrazzo Base Detail
3" = 1'-0"

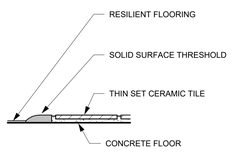

4 Floor Transition Detail
3" = 1'-0"

Keynote Legend	
Key Value	Keynote Text
06 16 00.C3	1/2" Particleboard
06 16 00.C7	1" Particleboard
06 22 00.A2	1x2 Wood Trim
06 22 00.A4	1x4 Wood Trim
09 22 16.13.I4	3 5/8" Metal Runner

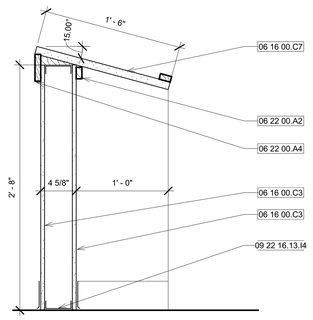

3 Fixed Student Desk - Keynotes
1 1/2" = 1'-0"

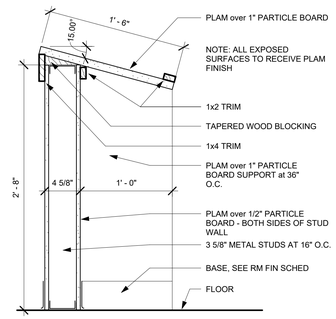

2 Fixed Student Desk
1 1/2" = 1'-0"

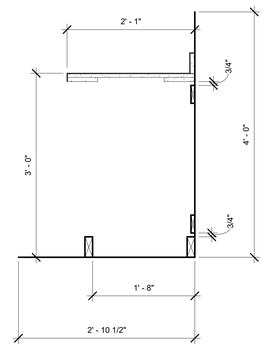

1 Base Cabinet View - Drawer
1" = 1'-0"

NICHOLAS RODRIGUEZ
DRAFTING AND DESIGN

Digital Design Graphics Technology
2277 Napa-Vallejo Hwy
Napa, CA 94558

No.	Description	Date

RODRIGUEZ

HARBOR VIEW OFFICES

DETAILS

Project Number	2024-0043
Date	4-30-2024
Drawn By	NRODRIGUEZ
Checked By	CJOURGENSEN

A600

Scale	As indicated

6/11/2024 11:54:01 AM

Room Schedule

Number	Name	Base Finish	Floor Finish	Wall Finish	Ceiling Finish	Area
#1	STAIRS					168 SF
#2	STAIRS					168 SF
100	ATRIUM					1823 SF
101	RECEPTION & WAITING AREA					313 SF
102	OPEN OFFICE					1991 SF
103	CONFERENCE ROOM					204 SF
104	WORK ROOM					433 SF
105	WOMEN'S	COVED CT	CT	CT	Gyp. Bd.	149 SF
106	MEN'S	COVED CT	CT	CT	Gyp. Bd.	149 SF
107	MECH/ ELEC ROOM					107 SF
108	BREAK ROOM					310 SF
109	OFFICE					119 SF
110	OFFICE					186 SF
111	OPEN OFFICE					2339 SF
200	ATRIUM					1774 SF
201	OPEN OFFICE					3013 SF
202	TELECOMM					105 SF
203	OPEN OFFICE					3009 SF
204	WOMEN'S	COVED CT	CT	CT	Gyp. Bd.	149 SF
205	MEN'S	COVED CT	CT	CT	Gyp. Bd.	149 SF
300	ATRIUM					1730 SF
301	OPEN OFFICE					1907 SF
302	OFFICE	Wood	Carpet 1	VWC 1	ACT 1	229 SF
303	OFFICE	Wood	Carpet 1	VWC 1	ACT 1	232 SF
304	OFFICE	Wood	Carpet 1	VWC 1	ACT 1	232 SF
305	OFFICE	Wood	Carpet 1	VWC 1	ACT 1	229 SF
306	OFFICE	Wood	Carpet 1	VWC 1	ACT 1	125 SF
307	STORAGE ROOM					105 SF
308	MISC/SUPPLY					125 SF
309	OFFICE	Wood	Carpet 1	VWC 1	ACT 1	229 SF
310	OFFICE	Wood	Carpet 1	VWC 1	ACT 1	232 SF
311	OPEN OFFICE					1902 SF
312	OFFICE	Wood	Carpet 1	VWC 1	ACT 1	232 SF
313	OFFICE	Wood	Carpet 1	VWC 1	ACT 1	229 SF
314	WOMEN'S	COVED CT	CT	CT	Gyp. Bd.	170 SF
315	MEN'S	COVED CT	CT	CT	Gyp. Bd.	170 SF

Door Schedule

Mark	Width	Height	Frame Material	Frame Type	Fire Rating
1A	3' - 0"	7' - 0"			
1B	3' - 0"	7' - 0"			
1C	3' - 0"	7' - 0"			
1D	3' - 0"	7' - 0"			
2A	3' - 0"	7' - 0"			
2B	3' - 0"	7' - 0"			
2C	3' - 0"	7' - 0"			
2D	3' - 0"	7' - 0"			
100A	3' - 0"	7' - 0"			
100B	3' - 0"	7' - 0"			
100C	3' - 1 1/2"	7' - 8 1/4"			
100D	3' - 1 1/2"	7' - 8 1/4"			
101	5' - 8"	6' - 8"			
102A	5' - 8"	6' - 8"			
102B	3' - 0"	7' - 0"			
103	3' - 0"	7' - 0"			
104	3' - 0"	7' - 0"			
105	3' - 0"	7' - 0"			
106	3' - 0"	7' - 0"			
107	3' - 0"	7' - 0"			
108	3' - 0"	7' - 0"			
109	3' - 0"	7' - 0"			
110	3' - 0"	7' - 0"			
111A	5' - 8"	6' - 8"			
111B	3' - 0"	7' - 0"			
201A	5' - 8"	6' - 8"			
201B	3' - 0"	7' - 0"			
202	3' - 0"	7' - 0"			
203A	5' - 8"	6' - 8"			
203B	3' - 0"	7' - 0"			
204	3' - 0"	7' - 0"			
205	3' - 0"	7' - 0"			
301A	5' - 8"	6' - 8"			
301B	3' - 0"	7' - 0"			
302	3' - 0"	7' - 0"			
303	3' - 0"	7' - 0"			
304	3' - 0"	7' - 0"			
305	3' - 0"	7' - 0"			
306	3' - 0"	7' - 0"			
307	3' - 0"	7' - 0"			
308	3' - 0"	7' - 0"			
309	3' - 0"	7' - 0"			
310	3' - 0"	7' - 0"			
311A	5' - 8"	6' - 8"			
311B	3' - 0"	7' - 0"			
312	3' - 0"	7' - 0"			
313	3' - 0"	7' - 0"			
314	3' - 0"	7' - 0"			
315	3' - 0"	7' - 0"			

NICHOLAS RODRIGUEZ
DRAFTING AND DESIGN

Digital Design Graphics Technology
2277 Napa-Vallejo Hwy
Napa, CA 94558

No.	Description	Date

RODRIGUEZ

HARBOR VIEW OFFICES

SCHEDULES

Project Number	2024-0043
Date	4-30-2024
Drawn By	NRODRIGUEZ
Checked By	CJOURGENSEN

A800

Scale

6/11/2024 11:54:01 AM

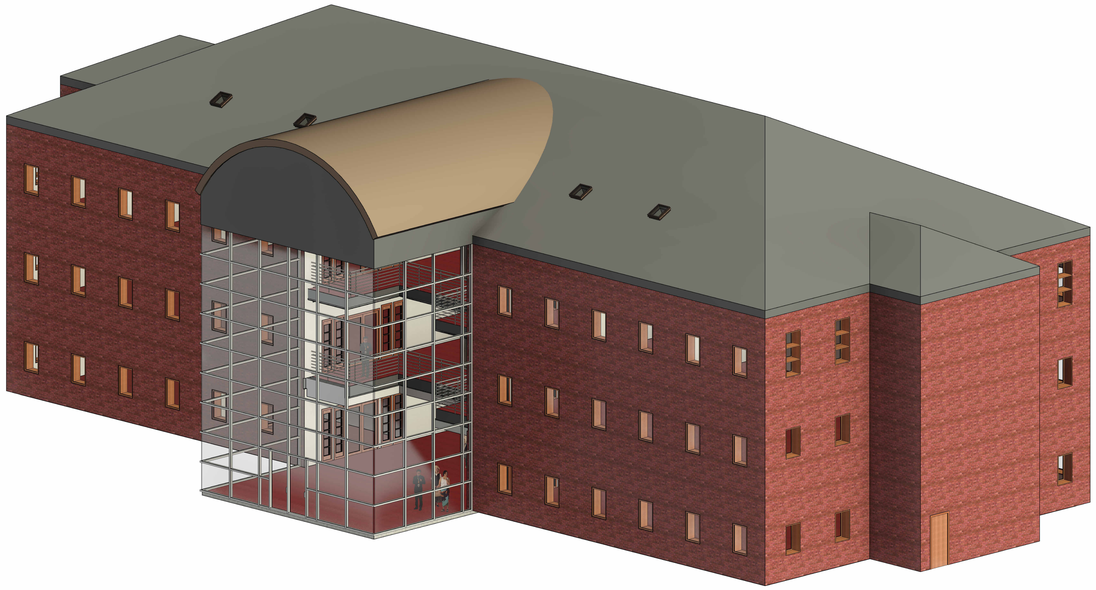

2 Atrium - Option 2

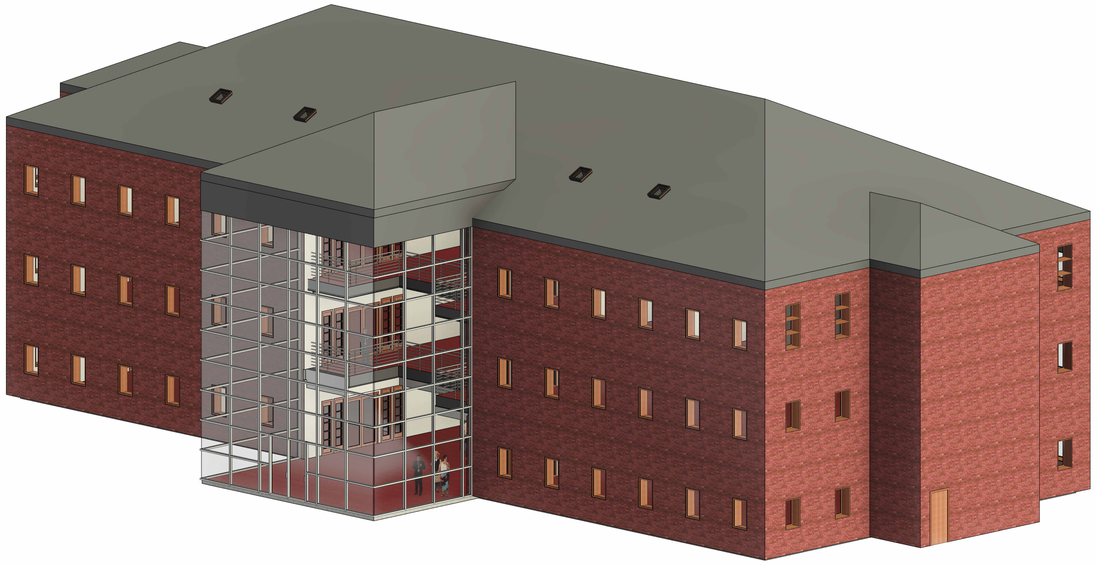

1 Curtainwall - Option 2

NICHOLAS RODRIGUEZ
DRAFTING AND DESIGN

Digital Design Graphics Technology
2277 Napa-Vallejo Hwy
Napa, CA 94558

No.	Description	Date

RODRIGUEZ

HARBOR VIEW OFFICES

ATRIUM OPTIONS

Project Number	2024-0043
Date	4-30-2024
Drawn By	NRODRIGUEZ
Checked By	CJOURGENSEN

A900

Scale

6/11/2024 11:54:38 AM

HARBOR VIEWS OFFICE BUILDING

Sheet List	
Sheet Number	Sheet Name
A101	LEVEL 1 FLOOR PLAN
A102	LEVEL 2 FLOOR PLAN
A103	LEVEL 3 FLOOR PLAN
A111	LEVEL 1 RCP
A112	LEVEL 2 RCP
A113	LEVEL 3 RCP
A200	EXTERIOR ELEVATIONS
A201	EXTERIOR ELEVATIONS
A300	BUILDING SECTIONS
A400	WALL SECTIONS
A500	INTERIOR ELEVATIONS
A600	DETAILS
A800	SCHEDULES
A900	ATRIUM OPTIONS
T001	TITLE SHEET

GENERAL NOTES:

1. THE STRUCTURAL DRAWINGS SHALL BE USED IN CONJUNCTION WITH THE SPECIFICATIONS, ARCHITECTURAL, MECHANICAL, ELECTRICAL, AND SANITARY DRAWINGS.

2. IN THE INTERPRETATION OF THE DRAWINGS, INDICATED DIMENSIONS SHALL GOVERN AND DISTANCES OR SIZES SHALL NOT BE SCALED FOR CONSTRUCTION PURPOSES.

3. BARS OF REINFORCED CONCRETE MEMBERS EXPOSED TO THE WEATHER SHALL BE PROTECTED WITH AT LEAST 1.5” AND IN NO CASE LESS THAN 1” CONCRETE. THESE CONDITIONS MAY BE WAIVED WHEN ADEQUATE WATERPROOFING IS PROVIDED.

4. ALL CONCRETE WORKS SHALL BE DONE IN ACCORDANCE WITH THE ACI-318-87 BUILDING CODE FOR REINFORCED CONCRETE AND ALL STRUCTURAL WORK SHALL BE DONE IN ACCORDANCE WITH AIS C SPECIFICATIONS FOR AS, DO NOT CONFLICT WITH LOCAL BUILDING CODE REQUIREMENTS.

5. CONTRACTOR SHALL COORDINATE WITH THE AR, ME, E, AND SE PLANS AS TO THE EXACT SIZES AND LOCATION OF HOLES THROUGH FLOOR SLABS AND WALLS.

NICHOLAS RODRIGUEZ
DRAFTING AND DESIGN

Digital Design Graphics Technology
2277 Napa-Vallejo Hwy
Napa, CA 94558

No.	Description	Date

RODRIGUEZ

HARBOR VIEW OFFICES

TITLE SHEET

Project Number	2024-0043
Date	4-30-2024
Drawn By	NRODRIGUEZ
Checked By	CJOURGENSEN

T001

Scale

6/11/2024 11:54:38 AM